TRAINER TREADMILL USER MANUAL

PLEASE READ ALL INSTRUCTION IN THE OWNER'S MANUAL CAREFULLY .BEFORE ASSEMBLY AND USE THE TREADMILL.AND KEEP IT FOR FUTURE REFERENCE.

CONTENTS

CONTENT----------1
IMPORTANT SAFELY PRECAUTIONS----------2
ASSEMBLY INSTRUCTIONS----------3-5
FOLDING & UNFOLDING INSTRUCTIONS----------6
INCLINE INSTRUCTIONS----------7
GROUNGDING METHODS----------8
OPERATION GUIDE----------9-12
GETTING STARTED GUIDE----------13
SAFETY EXERCISE----------14
WARM-UP EXERCISE----------15
MAINTANCE INSTRUCTIONS----------16
BELT ADJUSTMENT----------17
EXPLODED DRAWINGS----------18
PARTS LIST----------19-20
ERROR CODE AND SIGNIFICANCE----------21

IMPORTANT SAFETY PRECAUTIONS

WARNING

Before starting any exercise program, consult with your physician or health professional， especially the person who is above 35 years old people or has some health problems before. We take no responsibility for any troubles or hurts due to above reasons. Don't power on until you finish assembly the treadmill and covering the protected top of motor.

ATTENTIONS

01. Do not plug anything into any parts of this equipment, or it may damage.

02.When using this treadmill, keep attaching the safety pull pin rope to your clothes or belt.If the treadmill should suddenly increase in speed due to an electronics failure or the speed inadvertently increased, the treadmill will come to a sudden stop when the pull pin is disengaged from the console.

03.If you use the treadmill for the first time, you must hold the handrail until you feel comfortable on the running belt.

04. Never start the treadmill while you are standing on the walking belt, and always stand on the foot rails on the sides of the frame until the belt is moving.

05. Do not wear long, loose fitting clothing that could become caught in the treadmill. Always wear running or aerobic shoes with rubber soles.

06. The treadmill is only used for adults, child use the treadmill must have adult on side.

07. Keep small children or pet away from the treadmill during operation.

08. Position the treadmill on a clear, level surface. Do not place the treadmill on thick carpet as it may interfere with proper ventilation.

09.When the treadmill is not being used, the power cord should be unplugged and the safety pull pin removed. Note the power cord of motorized treadmill made by special equipment, and if it is broken, please contact distributor quickly.The power cord of motorized treadmill is specialized. If the power cord is damaged, please purchase it from distributor or contact our company directly.

10. Do not do exercise in 40 minutes after meal.

ASSEMBLY INSTRUCTIONS

When you open the carton, you will find the below spare parts.

1 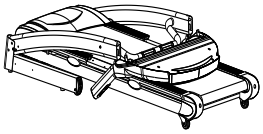	**10**	**21**	**22** 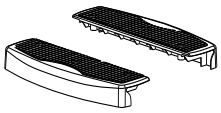
32 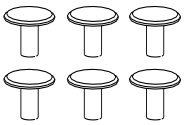	**47** 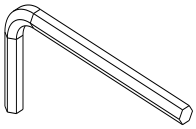	**48**	**63** 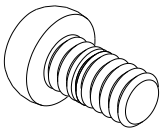
65 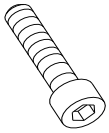	**86** 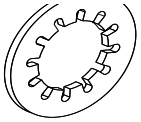	**89** 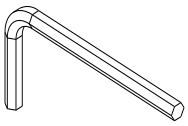	**90** 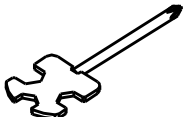
95 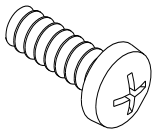			

SPARE PARTS LIST

NO.	DESCRIPTION	REMARK	Q'Y		NO.	DESCRIPTION	REMARK	Q'Y
1	MAIN FRAME		1		63	BOLT	M8*15	8
10	SAFETY KEY		1		65	BOLT	M6*25	6
21	FRONT COVER		2		86	WASHER	ϕ8.4*ϕ14.5 *t0.8	8
22	FOOT PEDAL		2		89	ALLEN WRENCH	S5	1
32	FOOT PEDAL PLUG		6		90	SCREW DRIVER		1
47	ALLEN WRENCH	S6	1		95	BOLT	M4*15	6
48	MP3 WIRE		1					

FIXING TOOLS:

5# ALLEN WRENCH 1pc、

6# ALLEN WRENCH 1pc、

SCREW DRIVER 1pc

STEP 1: Lift up the upright and computer as the picture shows.

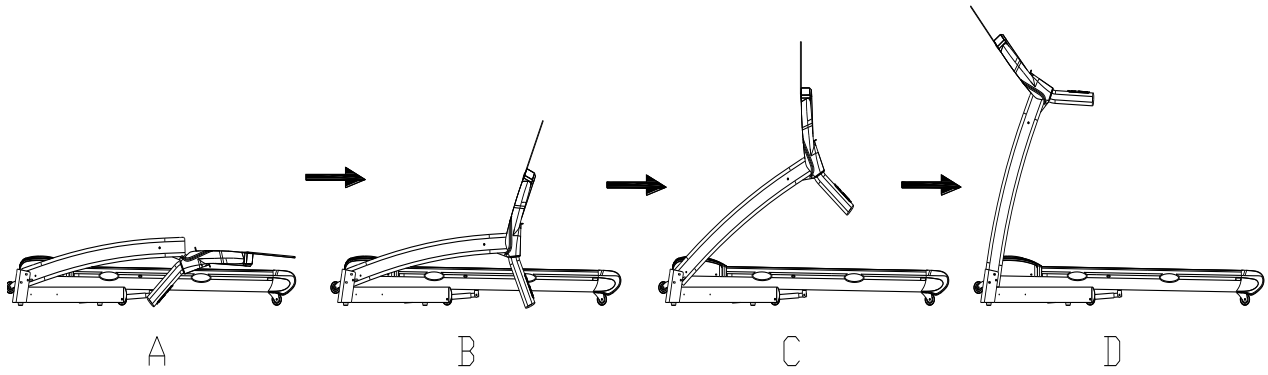

STEP 2: Use ALLEN WRENCH (89) and SCREW DRIVER (90) to lock the bolts to the parts.

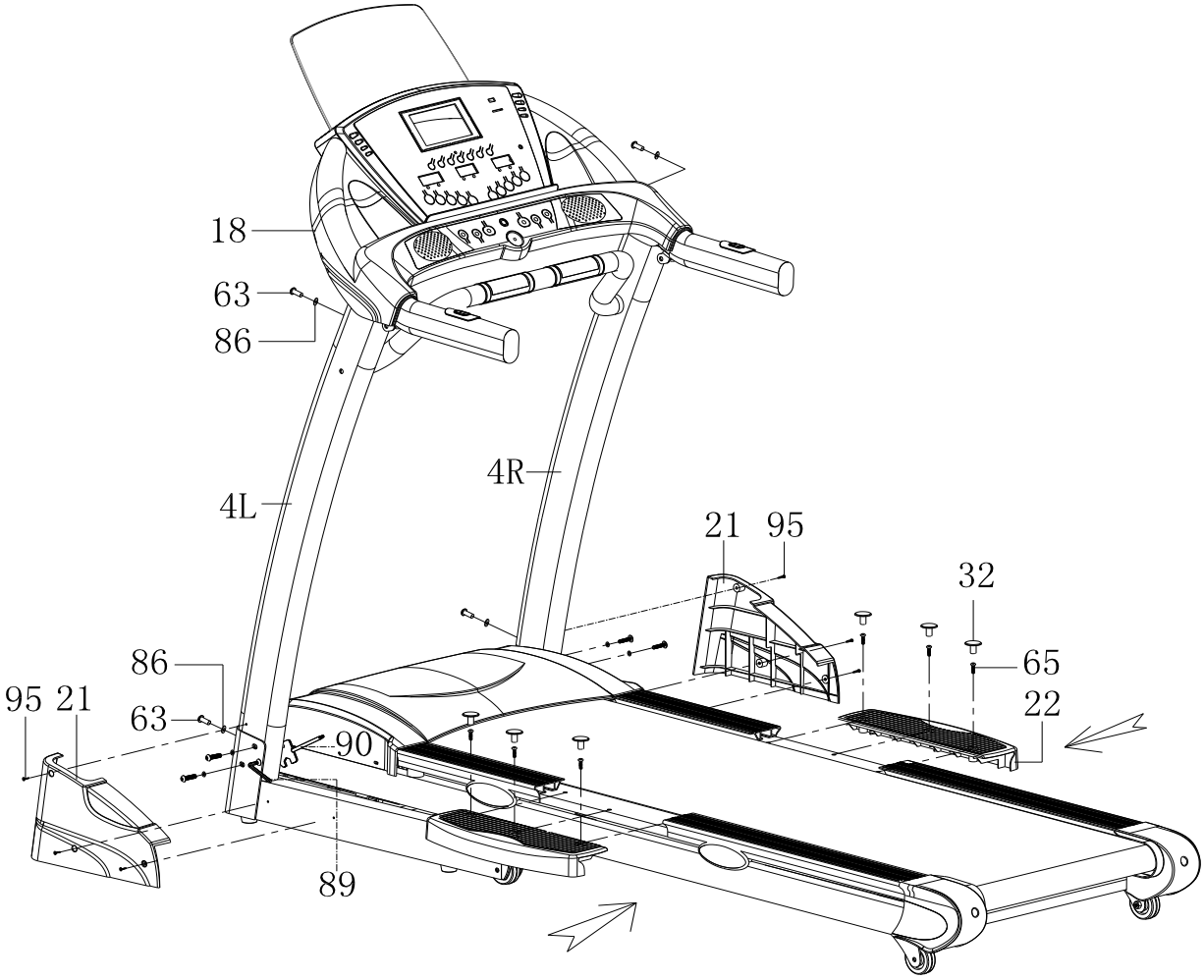

STEP 3: Use ALLEN WRENCH (89) to lock the handrail to the upright (4L/R), then put the safety key and mp3 output wire.

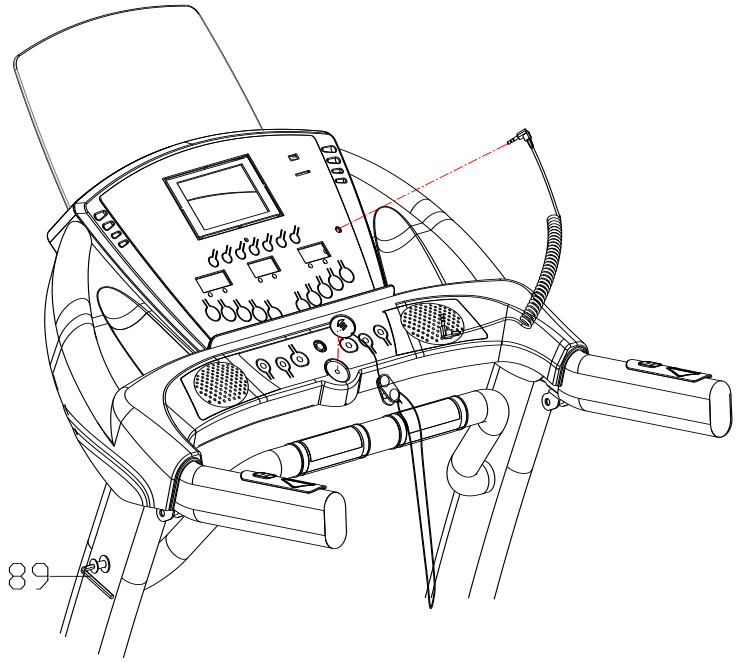

FOLDING INSTRUCTIONS

ATTENTION:

Must confirm complete assembly as the required above and lock all bolts.

Do the following operation after checking everything is OK.

Before you use the treadmill, please read the instruction carefully.

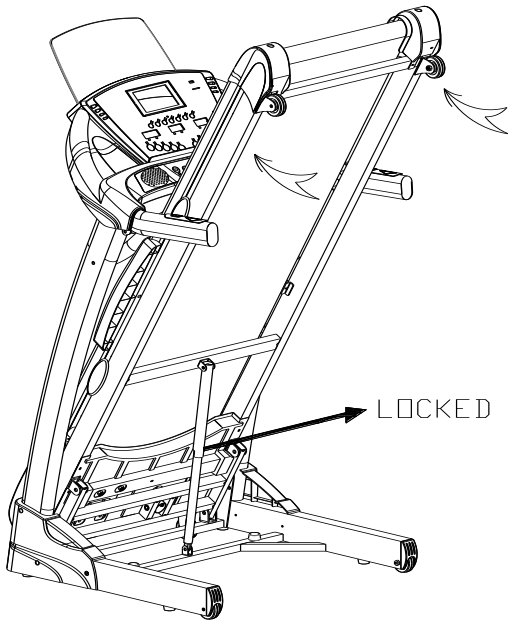

Lift up the machine and force to pull up until you heard "click" that made by safety casing stuck the pneumatic cylinder.

UNFOLDING INSTRUCTIONS

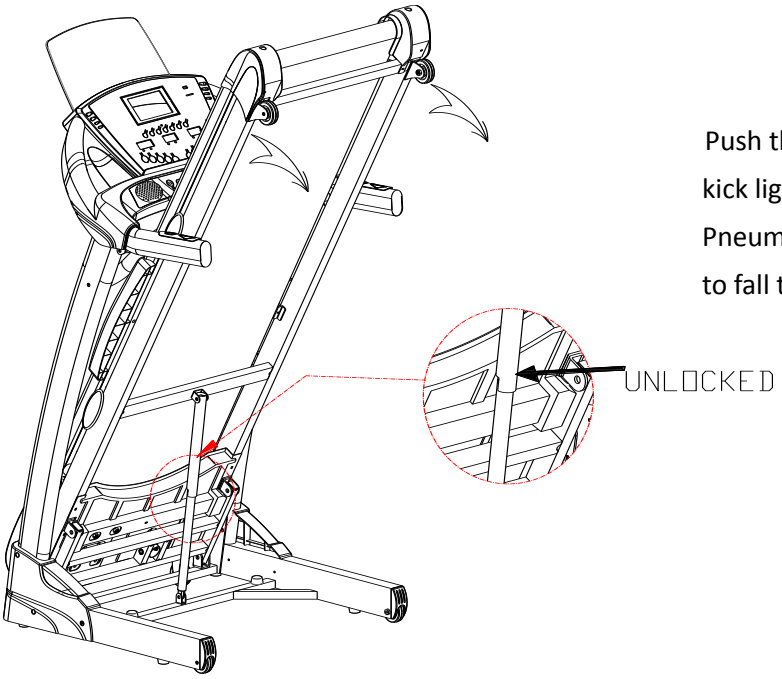

Push the deck slightly forward and kick lightly on the center of the Pneumatic cylinder. Allow the deck to fall to the floor slowly.

INCLINE INSTRUCITONS

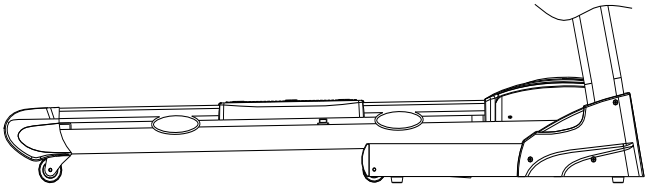

PIC I

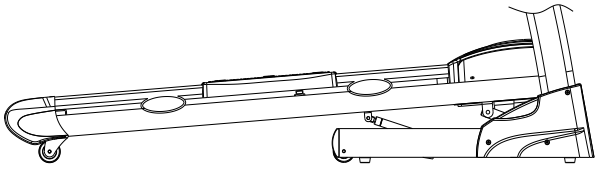

PIC II

INCLINE INSTRUCTIONS

“INCLINE+/-”and “+/-”on left handrail is incline add and substract button.

To adjust incline when treadmill running, the stepping is 1 level / times.

Press the button more than 2 seconds, will be up or down automatic.

Also have shortcut key 3, 6, 9, 12.

Picture I shows incline ”0”, Picture II shows incline “12”.

GROUNDING METHODS

This product must be grounded. If it is should be malfunction or breakdown, grounding provides a path of least resistance for electric current to reduce the risk of electric shock. This product is equipped with a cord having an equipment-grounding conductor and a grounding plug. The plug must be plugged into an appropriate outlet that is properly installed and grounded in accordance with all local codes and ordinances.

DANGER – Improper connection of the equipment-grounding conductor can result in a risk of electric shock. Check with a qualified electrician or serviceman if you are in doubt as to whether the product is properly grounded. Do not modify the plug provided with the product–if it will not fit outlet, have a proper outlet installed by a qualified electrician.

This product is for use on a nominal **230**-volt circuit and has a grounding plug that looks like the plug illustrated in sketch A in following figure. Make that the product is connected to an outlet having the same configuration as the plug. No adapt should be used with this product.

OPERATION GUIDE

WINDOWS DISPLAY

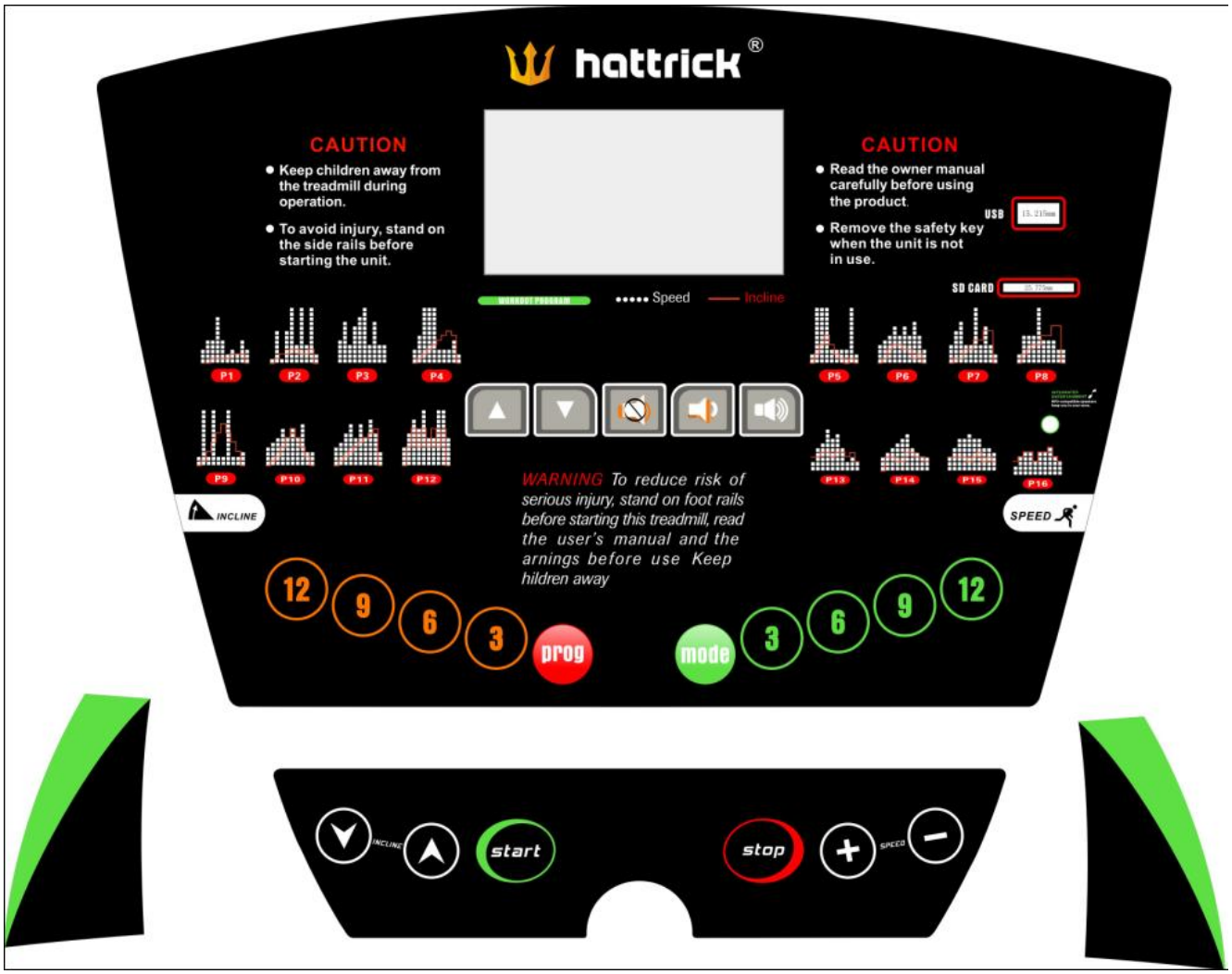

2.START

Normal start after 5 seconds countdown.

3. PROGRAM

3 manual mode, 16 automatic programs.

4. SAFETY LOCK FUNCTION

The window will show "---" when you take away the safety lock and the treadmill will stop quickly with "didi" alarm noise. Put the safety lock on to set back to the program default.

5. BUTTON FUNCTION

START , STOP , PROG , MODE , SPEED+/- , INCLINE+/- , SPEED SHORTCUTS

BUTTON 3 / 6 / 9 / 12, INCLINE SHORTCUTS BUTTON 3 / 6 / 9 / 12.

5.1 START/STOP

“START”--When the treadmill is not running, press this button to start, start speed is"1.0"

“STOP”--when the treadmill is running, press this button to stop and set back to program default manual mode after stopped.

5.2. PROGRAM

when the treadmill is not running, press PROGRAM button to circle and to choose and set up the exercise time and program from “1.0” to “ P01--P16 ”. Manual mode is the default program, the default speed in kilometer is 1.0 km/h.”and the fastest speed is 18.0 km/h.

5.4. SPEED+/-

Set default count; to adjust speed when treadmill start, the scope is 0.1km/h in kilometer. Press the button more than 2 seconds and it will go up or down quickly. Handrail also has the two buttons.

5.5 INCLINE+/-

Set default count; to adjust incline when treadmill start, the scope is 1 level/time. Press the button more than 2 seconds and it will go up or down quickly. Handrail also has the two buttons.

5.6. SPEED SHORTCUTS

3, 6, 9, 12 can adjust the speed when treadmill is running.

5.7 INCLINE SHORTCUTS

3, 6, 9, 12 can adjust the incline when the treadmill is running.

6. FUNCTION DISPLAY

6.1.SPEED: display running speed

6.2.TIME: display the running time or countdown

6.3. DISTANCE: display the running total distance or distance countdown

6.4. CALORIE:display the calorie or calorie countdown

6.5. PULSE: display pulse data

6.6. ALL WINDOW DISPLAY DATE RANGE

TIME：0:00 – 99.59 (MIN) DISTANCE: 0.00 – 99.9 (KM)

CALORIES: 0.0 – 999 (C) SPEED:1.0 – 18.0 (KM/H)

PULSE: 50 – 200 (BPM) INCLINE: 0-12%

7. PULSE FUNCTION

When the treadmill is running,hold the hand pulse for about 5 seconds, it will then display pulse data.The pluse date range is 50-200 times/ minute. It has heart-shaped graphics when testing pulse. This data is only for reference,can not be used for medical data.

8. PROGRAM EXERCISE CHART

PROG	TIME	SETTING TIME / 10 = EVERY GRADE TIME									
		1	**2**	**3**	**4**	**5**	**6**	**7**	**8**	**9**	**10**
P1	SPEED	3	5	5	10	5	2	3	2	5	3
	INCLINE	0	0	1	1	1	1	2	2	2	0
P2	SPEED	1	7	1	7	12	4	12	4	12	2
	INCLINE	0	1	2	2	3	3	2	2	3	0
P3	SPEED	5	9	4	8	10	12	4	8	4	4
	INCLINE	0	1	2	3	4	5	4	5	4	0
P4	SPEED	3	6	12	12	12	3	3	3	5	2
	INCLINE	0	1	2	3	4	5	6	7	6	0
P5	SPEED	2	12	12	12	3	3	3	3	12	2
	INCLINE	0	2	4	6	4	2	1	0	1	0
P6	SPEED	4	5	6	8	6	8	6	9	6	3
	INCLINE	0	1	3	4	4	3	3	1	2	0
P7	SPEED	4	7	9	4	4	12	4	8	4	2
	INCLINE	0	1	1	3	3	5	5	7	7	0
P8	SPEED	2	6	6	6	12	5	5	5	3	3
	INCLINE	0	2	3	4	4	6	6	8	8	0
P9	SPEED	2	12	2	12	2	2	12	2	2	3
	INCLINE	0	1	3	5	7	9	7	5	3	0
P10	SPEED	4	5	6	8	6	8	6	9	3	3
	INCLINE	0	1	2	4	6	8	6	4	2	0
P11	SPEED	4	5	7	9	6	9	6	10	7	3
	INCLINE	0	1	2	3	4	5	6	7	8	0
P12	SPEED	4	7	10	8	12	6	6	12	12	6
	INCLINE	0	4	8	4	8	4	8	4	8	0
P13	SPEED	2	5	6	9	7	8	5	2	3	2
	INCLINE	3	3	4	4	3	4	4	3	4	2
P14	SPEED	3	4	5	6	7	8	5	4	3	3
	INCLINE	0	3	3	2	2	4	4	3	3	2
P15	SPEED	3	5	7	7	8	7	7	5	5	4
	INCLINE	3	3	3	3	2	3	4	2	3	2
P16	SPEED	2	4	5	6	8	7	9	3	3	2
	INCLINE	3	4	5	5	3	5	5	6	4	3

9. MODE PARAMETER SETTINGS

Countdown initial setting 30:00 minutes,setting range 5:00--99:00 minutes,stepping 1:00.

Countdown calorie initial setting 50 therm,setting range 20--990 therm,stepping 10.

Countdown distance initial setting 1.0 km，setting range 1.0---99.0 km,steeping 1.0.

Cycle switch order is: Manual, Time, Distance, Calories.

10. BODY FAT TESTER

When treadmill is running,press"PROGRAM",and the window displays "FAT".

Press "MODE" to choose every parameters (F1-"SEX",F2--"AGE",F3--"HEIGHT",F4--"WEIGHT"). Choose one mode,and use "SPEED+/-" to set. Finish all the parameters, the window will display "F5". Both hands hold the handrail pipe about 5 seconds, window will display your fat data.

Input parameter display and setting limits

PARAMETERS	ARRANGE	NOTE
SEX	01--02	01= MALE 02= FEMALE
AGE	10—99 YEARS	
HEIGHT	100—200 CM	
WEIGHT	20—150 KGS	

FA（BMI）	RESULT
≤19	UNDER WEIGHT
20--25	NORMAL WEIGHT
25--29	OVER WEIGHT
≥30	OBESITY

11.0 MP3 FUNCTION

This treadmill can accept various media medium : SD card / USB disk / MP3 wire /

headset socket. When you are playing music,please make sure the treadmill is in louder

state, not “MUTE” state.

A. SD card / USB disk display:

Insert the SD card or USB disk with music, the system will play them automatically.

Press buttons to choose the music or adjust the volume as you like.

B. MP3 wire display:

Insert the MP3 wire into your audio device (MP3 / PHONE) to display the music.

GETTING STARTED GUIDE

Press buttons to choose the music or adjust the volume as you like.

	“VOL+- “can adjust the volume when music is playing
	“Prev/next” can switch to the songs you are interested in when SD or or USB equipment is working.
	“MUTE” can make the loudspeaker mute when the music is playing

ATTENTION

When you insert SD card / USB disk / MP3 wire all together, the priority level is as below:

1, MP3 wire

2,SD card or USB disk.

12.OTHERS

10.1. The window displays "END" after running one contdown parameter, and every 2 seconds make 0.5 second alarm sound until the treadmill stopped, then return to manual mode status.

10.2. When setting one parameter,it can process cycle set.Such as the time setting range is 5:00--99:00,when reach 99:00,press“+”again,back to 5:00 can cycle set add and subtract use “+/-”.

10.3. Countdown time and countdown distance,only can set one of them, press last item to set running, the setting parameter is countdown, others display forward count.

10.4. Calorie standard value is 30 therm/km.

10.5. Accelerated speed is 0.5 km/s,deceleration is 0.5 km/s.

PREPARE

If you are around 35 years old, or have health problem, even this is your first time to do fitness exercise, please consult doctor or professional before use it. Before do exercise, please stand on the side to learn how to operate, such as start, stop and speed adjustment. After that stand on the plastic deck of the treadmill board, catch hold of the handrail, start by 1.6--3.2 km/h low speed, stand straight, look forward, one foot try to do few times, then stand on the belt to do exercise. After adapting, you can adjust the speed to 3--5 km/h and keep doing about 10 minutes,then stop.

SAFETY EXERCISE

EXERCISE

Please stand on the side to learn how to operate, such as speed and incline, until you know it then can start do exercise. Walk 1 km by constant step need about 15-25 minutes, please record it in fact. And walk 1 km by 4.8 km/h need about 12 minutes. If you can do it easily by few times, then can adjust the high speed and incline, and go on to do 30 minutes, you can take a good exercise. Before do slow walk exercise， please remember it is for your health and can not irritable.

AMOUNT OF EXERCISE

SHORTCUT——The best way to save time is do 15-20 minutes exercise.

Warm up 2 minutes by 4.8 km/h, and adjust the speed to 5.3 km/h and 5.8 km/h, continue do exercise by this two speeds. Then add 0.3 km/h per 2 minutes speed increase, until you feel breathing quickened but not breathe hard. Keep this speed to do exercise, if feels uncomfortable, please reduce 0.3 km/h. Leave 4 minutes to reduce speed at last. If you fell it is hard to strengthen exercises by increase speed, then you can choose the way of increase incline slowly, it also can strengthen exercise.

CONSUMPTION OF HEAT——This way can really consumption the heat.

Warm up 5 minutes by 4--4.8 km/h speed, then add 0.3 km/h per 2 minutes increasing speed, you can do 45 minutes on the speed that you feel it is comfortable and challenge. In order to strengthen do exercise. You can do 1 hour by this speed and add 0.3 km/h speed when you heard some business advertisements, and return the speed back when go to next program, so at this period, the heat will be consumed enough. At last keep 4 minutes to reduce the speed.

EXERCISE FREQUENCY

Target is 3--5 times per week, do 15-60 minutes each time. It is better to make a time schedule, do not accord to your favor. You can get the strenuous exercise degree through adjusting speed and incline. We'd suggest that do not set incline when start do exercise.

Please consult professional staff before do exercise. He can help recommendation exercise rate/intension and time according to your age and health condition. When running, if you feel chest tightness or chest pain, irregular Heartbeats, short of breath, dizziness or other unwell, please stop immediately! And consult professional before you want continually to do exercise. If you often use treadmill, you can choose normal walk speed or jog speed.

If you have no experience or can't make sure the best testing speed, you can reference below standard:

SPEED 1.0-3.0 KM	weak constitution people.
SPEED 3.0-4.5 KM	sedentary or not often exercise people.
SPEED 4.5-6.0 KM	walking quickly people.
SPEED 6.0-7.5 KM	fast walk people.
SPEED 7.5-9.0 KM	jogger.
SPEED 9.0-12.0 KM	intermediate speed runner.
MORE THAN 12.0 KM	excellent runner.

ATTENTION

It is suitable for walker to choose less than or equal to 6.0 km speed.

It is suitable for runner to choose more than or equal to 8.0 km speed.

WARM-UP EXERCISE

It is better to do some warm-up exercise. Warm the muscle easy stretch, so use 5-10 minutes to warm-up. Then stop and according below method to do stretch exercise for five times, and each foot do 10 seconds or more every time. After running, do those stretch exercises again.

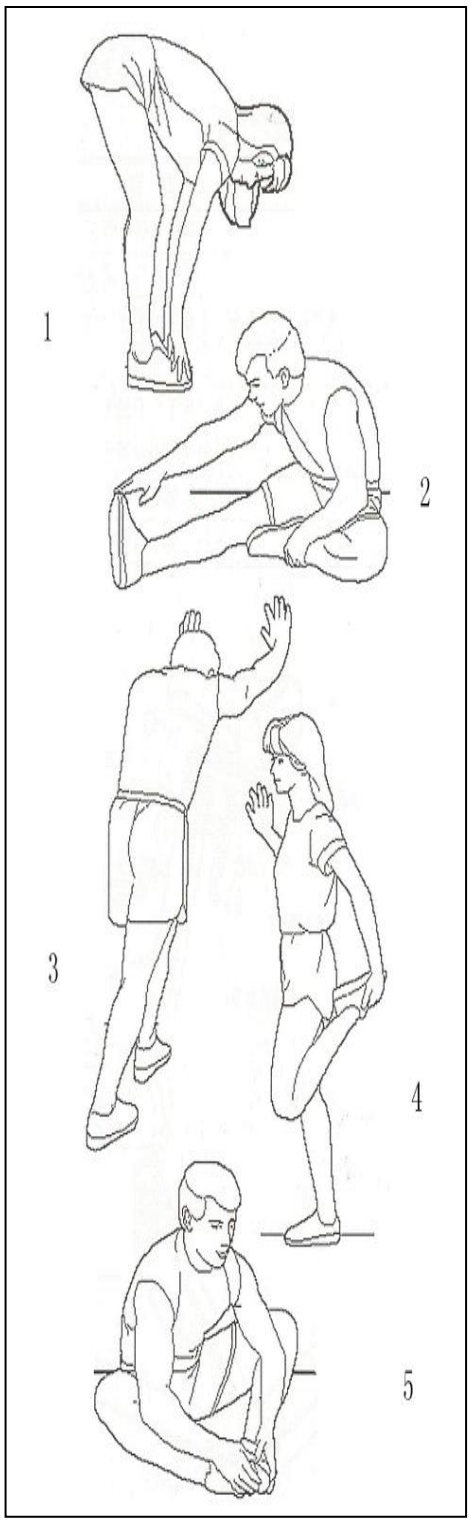

1.REACH DOWN Knees slightly bent and body slowly bent forward, back and shoulders relax, trying to touch toes. Keep 10-15 seconds, and relax. Repeat 3 times (PICTURE l).

2.HAMSTRINGS STRETCHES Sitting on a clean cushion, put one leg straight, the other inward and close to the inside of the straight leg. Try to touch your toes with your hands. Keeping for 10-15 seconds, and relax. Repeat 3 times for each leg (PICTURE 2).

3.CRUS & FEET TENDON STRECHES Standing with two hands on the wall or tree, one leg behind. Keeping your legs straight and the heel on the ground, tilt to the wall or tree. Keep 10-15 seconds, and relax. Repeat 3 times for each leg (PICTURE 3).

4.QUADRICEPS STRECHES Keeping your balance with your left hand holding on the wall or table, then stretch your right heel toward your buttocks slowly, until you feel very tense in the front of your thigh. Keep 10-15 seconds, and relax. Repeat 3 times for each leg (PICTURE 4).

5.SATORIUS (INNER MUSCLES OF THE THIGH) MUSCLE STRETCHES Sitting down with your soles opposite and knees outward. Pull your feet toward your groin Keep 10-15 seconds, and relax. Repeat 3 times (PICTURE 5).

MAINTENANCE INSTRUCTIONS

WARNING

Please make sure pull out the treadmill's power plug before cleaning or maintaining the product.

CLEANSING

General cleaning or the unit will greatly prolong the treadmill's life. Keep treadmill clean by dusting regularly. Be sure to clean the exposed part of the deck on either side of the walking belt and also the side rails. This reduces the build up of foreign material underneath the walking belt. Make sure the shoes are clean. The top of the belt may be cleaned with a wet soapy cloth. Be careful to keep liquid away from inside the motorized treadmill frame or from underneath the belt.

WARNING

Always unplug the treadmill from the electrical outlet before removing the motor cover. At least once a year remove the motor cover and vacuum under the motor cover.

This treadmill's walking belt and deck are equipped with a pre-lubricated, low maintenance deck system. The belt/ deck friction may play a major role in the function and life of your treadmill, thus requiring periodic lubrication. We recommend a periodic inspection of the deck. We recommend lubrication of the deck according to the following timetable:

Light user (less than 3 hours/ week)	every three weeks
Medium user (3-5 hours/ week)	every two weeks
Heavy user (more than 5 hours/ week)	every week

We suggest you buy lubricating oil from local distributors or contact our company directly. Pay attention, any other maintains please ask professionals for help.

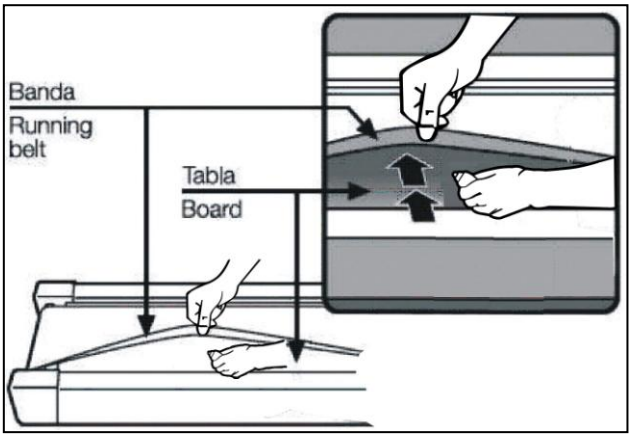

BELT ADJUSTMENT

Place treadmill on a level surface. Make treadmill run at approximately 6-8 km/h, observe the running belt deviate condition.

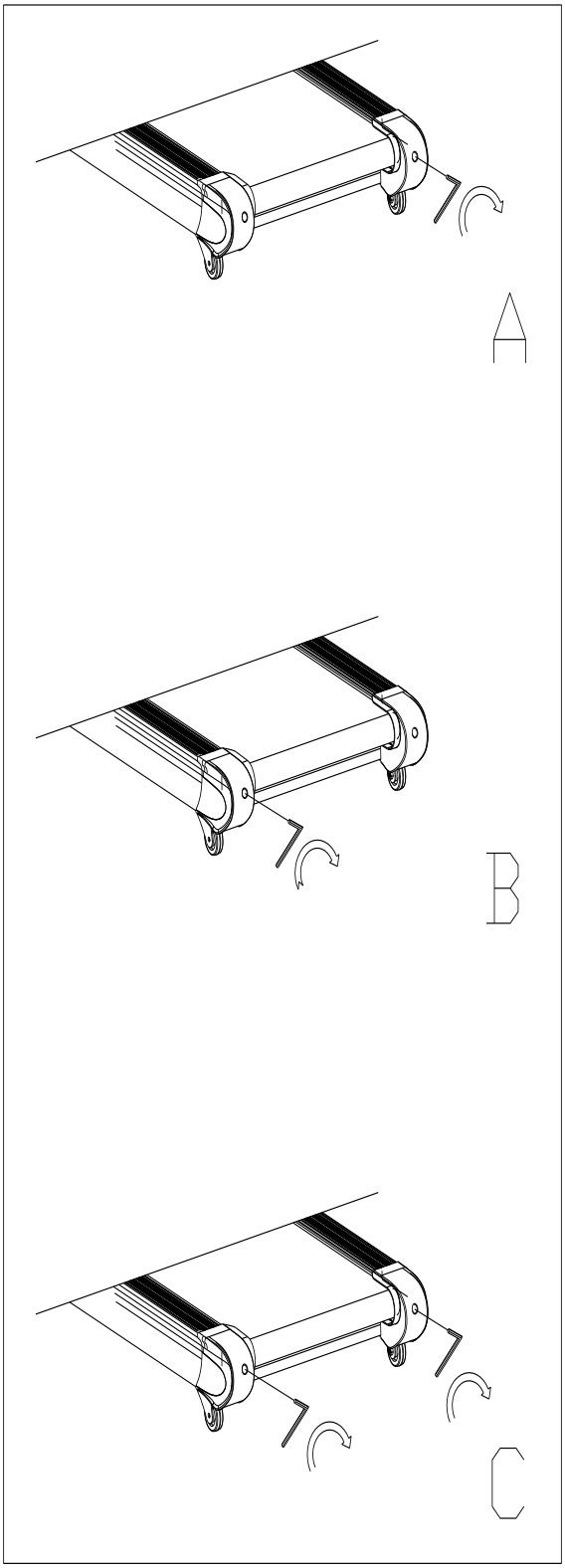

If the belt has drifted to the right, unplug the safety lock and power switch, and turn the right adjusting bolt 1⁄4 turn clockwise, then insert the power switch and safety lock, make the treadmill running, observe the running belt deviate condition. Repeat above steps until the running belt be placed in the middle. **See picture A**

Once the treadmill belt swerving to the left, unplug the safety lock, turn off the power, then with the left adjusting bolt clockwise rotation 1 / 4 laps, and turn on the safety lock and power to make treadmill running, checking the deviation of the treadmill belt. Repeat the above steps until the belt centered. **See picture B**

The treadmill belt will gradually relax after above steps or after a period of time using, unplug the safety lock, and turn off the power, with the two adjusting bolt clockwise rotation 1 / 4 laps, and turn on the safety lock and power to make treadmill running, then standing on the belt to confirm the tightness. Repeat the above steps until the belt moderate tightness. **See picture C**

EXPLODED DRAWING

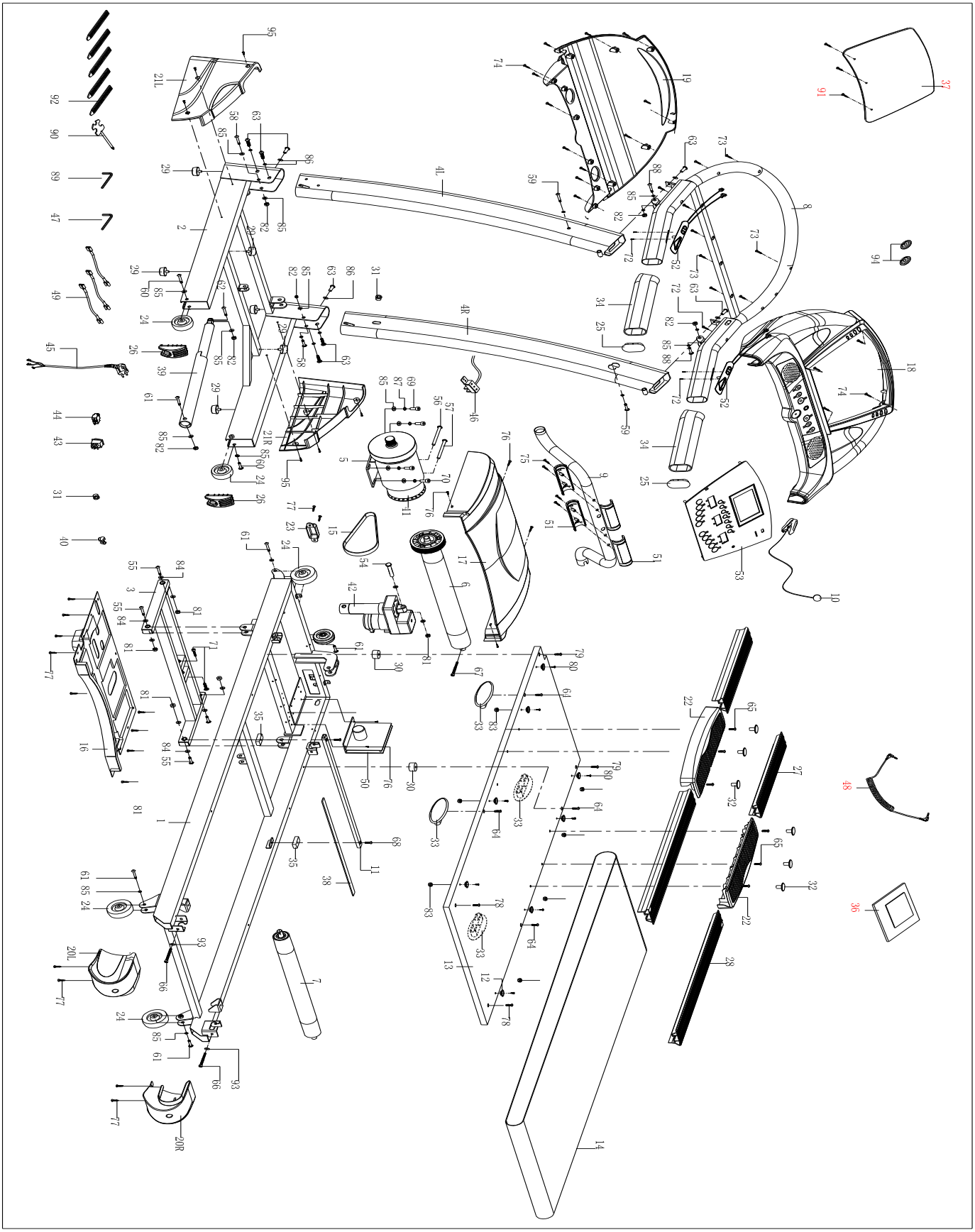

PARTS LIST

NO.	DESCRIPTION	MARK	Q'Y		NO.	DESCRIPTION	MARK	Q'Y
1	MAIN FRAME		1		25	INNER PIPE		2
2	BASE FRAME		1		26	MOVING WHEEL PLUG		2
3	INCLINE FRAME		1		27	EDGING A		2
4L\R	UPRIGHT		1		28	EDGING B		2
5	MOTOR BACKET		1		29	FLAT FOOT PAD		6
6	FRONT ROLLER		1		30	CUSHION PAD		2
7	REAR ROLLER		1		31	RING PLUG		2
8	COMPUTER BACKET		1		32	FOOT PEDAL PLUG		6
9	HANDRAIL PIPE		1		33	CUSHION PAD		4
10	SAFETY KEY		1		34	HANDRAIL COVER A		2
11	STRENTHEN BOARD		1		35	LITTLE PAD		2
12	BOWL WASHER		8		36	COMPUTER CHIP		1
13	RUNNING BOARD		1		37	BOOKSHELF		1
14	RUNNING BELT		1		38	EVA PAD		1
15	MOTOR BELT		1		39	CYLINDER		1
16	MOTOR BOTTOM COVER		1		40	POWER PLUG BUCKLE		1
17	MOTOR TOP COVER		1		41	DC MOTOR		1
18	COMPUTER		1		42	INCLINE MOTOR		1
19	COMPUTER BOTTOM COVER		1		43	POWER SWITCH		1
20	FOOT END CAP		2		44	OVERLOAD PROTECTOR		1
21	FRONT COVER		2		45	POWER LINE		1
22	FOOT PEDAL		2		46	MAGNETIC SENSOR		1

23	LITTLE COVER		1		47	ALLEN WRENCH	S6	1
24	ADJUSTABLE WHEELS		6		48	MP3 WIRE		1

NO.	DESCRIPTION	MARK	Q'Y		NO.	DESCRIPTION	MARK	Q'Y
49	SINGLE LINE		3		74	BOLT	ST4*15	12
50	CONTROLLER		1		75	BOLT	ST3.0*23	4
51	HAND PULSE		2		76	BOLT	M5*10	7
52	SHORTCUT KEY		2		77	BOLT	M4*15	20
53	COMPUTER PANEL		1		78	BOLT	M6*25	2
54	BOLT	M10*45	1		79	BOLT	M6*45	2
55	BOLT	M10*45	4		80	BOLT	M5*30	8
56	BOLT	M8*85	1		81	LOCK NUT	M10	5
57	BOLT	M8*75	1		82	LOCK NUT	M8	8
58	BOLT	M8*60	2		83	NUT	M5	8
59	BOLT	M8*55	2		84	WASHER	ϕ11*ϕ20*t2	10
60	BOLT	M8*50	2		85	WASHER	ϕ9*ϕ16*t1.6	22
61	BOLT	M8*40	5		86	INNER WASHER	ϕ8.4*ϕ14.5*t0.8	8
62	BOLT	M8*25	3		87	SPRING WASHER	ϕ8.1*ϕ12.3*t2.1	6
63	BOLT	M8*15	8		88	BOLT	M8*45	2
64	BOLT	M6*35	4		89	ALLEN WRENCH	S5	1
65	WASHER	M6*25	6		90	SCREW DRIVER		1
66	BOLT	M6*60	2		91	BOLT	ST4*35	3
67	BOLT	M6*45	1		92	CABLE TIE		5
68	BOLT	M6*15	2		93	WASHER		2
69	BOLT	M8*35	2		94	LOUDERSPEAKER		2
70	BOLT	M8*20	2		95	BOLT	M4*15	6
71	BOLT	M10*30	2					
72	BOLT	ST4*50	6					
73	BOLT	ST4*25	8					

ERROR CODE AND SIGNIFICANCE

CODE	DESCRIPTION	REASONS & SOLUTIONS
E1	Communication abnormal: The control and computer has abnormal communication after start	The computer shows fault code **E1** Possible reasons：Communication obstructed between controller and computer, please check the wire and make sure the wire connect well and the wire without and danger.
E2	No Speed Wireless Sensor Network	The computer shows fault code **E2** Possible Reasons：Can't receive the motor speed sensor feedback above 3 seconds, please check sensor plug and motor connect wire and the controller.
E3	Over-Current Protection	The computer shows fault code **E3** Possible Reasons:Over the rated load cause too much electricity that make system Self-preservation or some parts blocked and make DC motor can't process. Adjust the machine and restart. Another please check the DC motor or controller have any burned smell or not. If yes, please change the motor or controller. Another make sure the power and voltage is comply with standard.
E4	Incline self-learning fault	The computer shows fault code **E4** Check incline motor sense wire and AC wire are inserted well; AC wire is right inserted according to the indentify in the incline motor; make sure the incline motor wire without damager; after check those, press the button on controller, then start self-learning again.
E6	Explosion-Proof Protection	The machine shows fault code **E6** Possible Reason: Check the motor wire if connect well, and then connect it again.